Elektrotechnische Fabrik
GmbH & Co. KG

Surge protection HSW 7020

Technical data

HSW 7020	
Nominal voltage (U_n)	220-240 V_{ac}
Highest permanent voltage L-N (U_c)	320 V_{ac}
Highest permanent voltage L-L (U_c)	480 V_{ac}
Max. load current (I_L)	10 A
Voltage protection rating (U_P)	1,5 kV
Nominal discharge current 8/20µs (I_n)/ pole	5 kA
Max. discharge current 8/20µs (I_{max})/ pole	10 kA
Overall discharge current 8/20µs (I_{total})	30 kA
Combination waveform (U_{oc})/ pole	10 kV
Short circuit current rating	10000 A
Defective device	Disconnection AC network cut-off
Protective function in case of defect	LED off
Connection	max. 2,5 mm²
Applied standards	DIN EN 61643-11

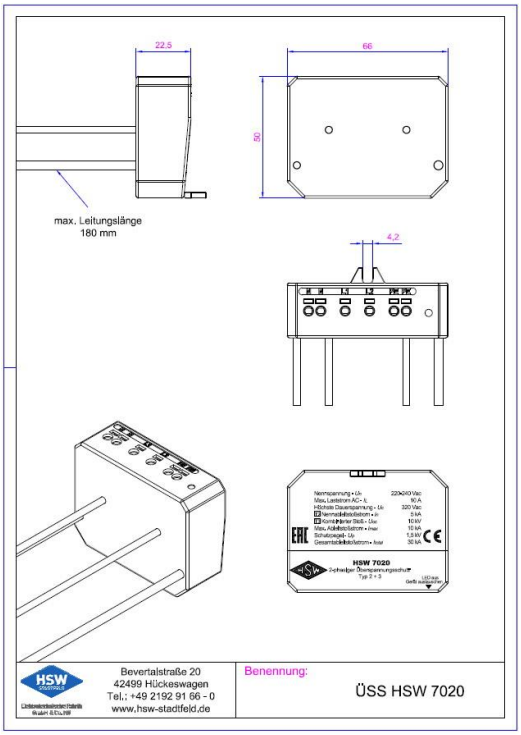

Print errors and technical changes excepted (Status: July 2019)